UNIVERSITY OF CAMBRIDGE INTERNATIONAL EXAMINATIONS
General Certificate of Education Advanced Level

CANDIDATE NAME

CENTRE NUMBER

CANDIDATE NUMBER

0026379478

PHYSICS **9702/41**

Paper 4 A2 Structured Questions **October/November 2011**

2 hours

Candidates answer on the Question Paper.

No Additional Materials are required.

READ THESE INSTRUCTIONS FIRST

Write your Centre number, candidate number and name on all the work you hand in.
Write in dark blue or black pen.
You may use a soft pencil for any diagrams, graphs or rough working.
Do not use staples, paper clips, highlighters, glue or correction fluid.
DO **NOT** WRITE IN ANY BARCODES.

Answer **all** questions.
You may lose marks if you do not show your working or if you do not use appropriate units.

At the end of the examination, fasten all your work securely together.
The number of marks is given in brackets [ ] at the end of each question or part question.

For Examiner's Use	
1	
2	
3	
4	
5	
6	
7	
8	
9	
10	
11	
Total	

This document consists of **24** printed pages.

DC (SM/CGW) 34889/5
© UCLES 2011

Data

speed of light in free space,	$c = 3.00 \times 10^{8}\ \text{m s}^{-1}$
permeability of free space,	$\mu_0 = 4\pi \times 10^{-7}\ \text{H m}^{-1}$
permittivity of free space,	$\varepsilon_0 = 8.85 \times 10^{-12}\ \text{F m}^{-1}$
elementary charge,	$e = 1.60 \times 10^{-19}\ \text{C}$
the Planck constant,	$h = 6.63 \times 10^{-34}\ \text{J s}$
unified atomic mass constant,	$u = 1.66 \times 10^{-27}\ \text{kg}$
rest mass of electron,	$m_e = 9.11 \times 10^{-31}\ \text{kg}$
rest mass of proton,	$m_p = 1.67 \times 10^{-27}\ \text{kg}$
molar gas constant,	$R = 8.31\ \text{J K}^{-1}\ \text{mol}^{-1}$
the Avogadro constant,	$N_A = 6.02 \times 10^{23}\ \text{mol}^{-1}$
the Boltzmann constant,	$k = 1.38 \times 10^{-23}\ \text{J K}^{-1}$
gravitational constant,	$G = 6.67 \times 10^{-11}\ \text{N m}^2\ \text{kg}^{-2}$
acceleration of free fall,	$g = 9.81\ \text{m s}^{-2}$

© UCLES 2011

Formulae

uniformly accelerated motion, $s = ut + \frac{1}{2}at^2$
$v^2 = u^2 + 2as$

work done on/by a gas, $W = p\Delta V$

gravitational potential, $\phi = -\frac{Gm}{r}$

hydrostatic pressure, $p = \rho gh$

pressure of an ideal gas, $p = \frac{1}{3}\frac{Nm}{V}\langle c^2 \rangle$

simple harmonic motion, $a = -\omega^2 x$

velocity of particle in s.h.m., $v = v_0 \cos \omega t$
$v = \pm \omega \sqrt{(x_0^2 - x^2)}$

electric potential, $V = \frac{Q}{4\pi\varepsilon_0 r}$

capacitors in series, $1/C = 1/C_1 + 1/C_2 + \ldots$

capacitors in parallel, $C = C_1 + C_2 + \ldots$

energy of charged capacitor, $W = \frac{1}{2}QV$

resistors in series, $R = R_1 + R_2 + \ldots$

resistors in parallel, $1/R = 1/R_1 + 1/R_2 + \ldots$

alternating current/voltage, $x = x_0 \sin \omega t$

radioactive decay, $x = x_0 \exp(-\lambda t)$

decay constant, $\lambda = \frac{0.693}{t_{\frac{1}{2}}}$

© UCLES 2011

[Turn over

Section A

Answer **all** the questions in the spaces provided.

1 **(a)** A moon is in a circular orbit of radius r about a planet. The angular speed of the moon in its orbit is ω. The planet and its moon may be considered to be point masses that are isolated in space.

Show that r and ω are related by the expression

$$r^3\omega^2 = \text{constant}.$$

Explain your working.

[3]

(b) Phobos and Deimos are moons that are in circular orbits about the planet Mars. Data for Phobos and Deimos are shown in Fig. 1.1.

moon	radius of orbit / m	period of rotation about Mars / hours
Phobos	9.39×10^6	7.65
Deimos	1.99×10^7	

Fig. 1.1

© UCLES 2011

(i) Use data from Fig. 1.1 to determine

1. the mass of Mars,

mass = ... kg [3]

2. the period of Deimos in its orbit about Mars.

period = ... hours [3]

(ii) The period of rotation of Mars about its axis is 24.6 hours.
Deimos is in an equatorial orbit, orbiting in the same direction as the spin of Mars about its axis.

Use your answer in **(i)** to comment on the orbit of Deimos.

.....

.....[1]

© UCLES 2011

[Turn over

2 **(a)** One assumption of the kinetic theory of gases is that gas molecules behave as if they are hard, elastic identical spheres.

State two other assumptions of the kinetic theory of gases.

1. .....

.....

2. .....

.....

[2]

(b) Using the kinetic theory of gases, it can be shown that the product of the pressure p and the volume V of an ideal gas is given by the expression

$$pV = \frac{1}{3}Nm\langle c^2\rangle$$

where m is the mass of a gas molecule.

(i) State the meaning of the symbol

1. N,

.....[1]

2. $\langle c^2\rangle$.

.....[1]

(ii) Use the expression to deduce that the mean kinetic energy $\langle E_K\rangle$ of a gas molecule at temperature T is given by the equation

$$\langle E_K\rangle = \frac{3}{2}kT$$

where k is a constant.

[2]

(c) (i) State what is meant by the *internal energy* of a substance.

.....

.....

.....[2]

(ii) Use the equation in **(b)(ii)** to explain that, for an ideal gas, a change in internal energy ΔU is given by

$$\Delta U \propto \Delta T$$

where ΔT is the change in temperature of the gas.

.....

.....

.....[2]

3 A bar magnet is suspended from the free end of a helical spring, as illustrated in Fig. 3.1.

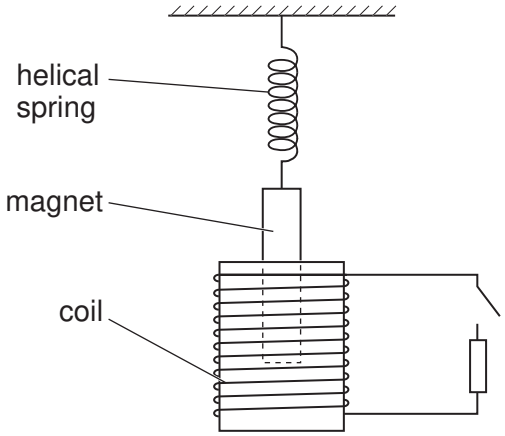

Fig. 3.1

One pole of the magnet is situated in a coil of wire. The coil is connected in series with a switch and a resistor. The switch is open.

The magnet is displaced vertically and then released. As the magnet passes through its rest position, a timer is started. The variation with time t of the vertical displacement y of the magnet from its rest position is shown in Fig. 3.2.

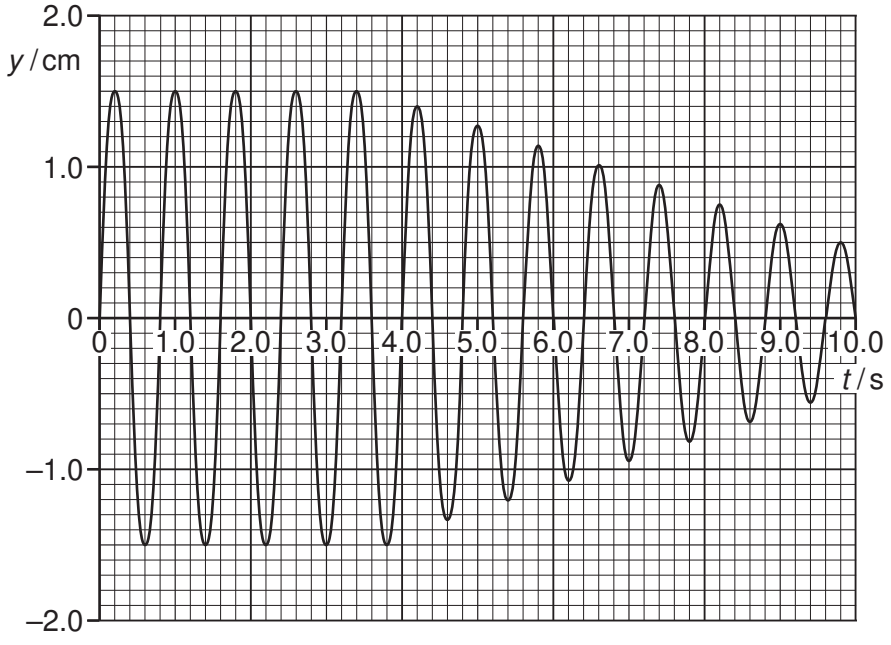

Fig. 3.2

At time $t = 4.0$ s, the switch is closed.

(a) Use Fig. 3.2 to

(i) state the evidence for the magnet to be undergoing free oscillations during the period $t = 0$ to $t = 4.0\,s$,

.....

.....[1]

(ii) state, with a reason, whether the damping after time $t = 4.0\,s$ is light, critical or heavy,

.....

.....

.....[2]

(iii) determine the natural frequency of vibration of the magnet on the spring.

frequency = ... Hz [2]

(b) (i) State Faraday's law of electromagnetic induction.

.....

.....

.....[2]

(ii) Explain why, after time $t = 4.0\,s$, the amplitude of vibration of the magnet is seen to decrease.

.....

.....

.....

.....

.....

.....[4]

4 Two small charged metal spheres A and B are situated in a vacuum. The distance between the centres of the spheres is 12.0 cm, as shown in Fig. 4.1.

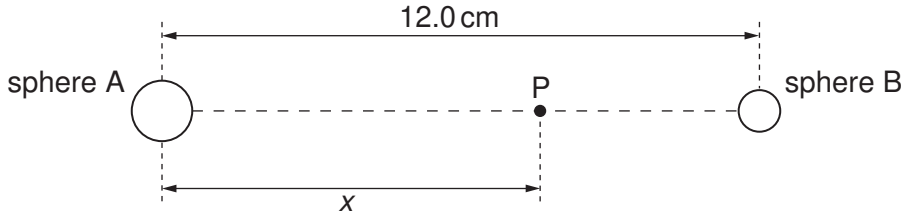

Fig. 4.1 (not to scale)

The charge on each sphere may be assumed to be a point charge at the centre of the sphere.
Point P is a movable point that lies on the line joining the centres of the spheres and is distance x from the centre of sphere A.
The variation with distance x of the electric field strength E at point P is shown in Fig. 4.2.

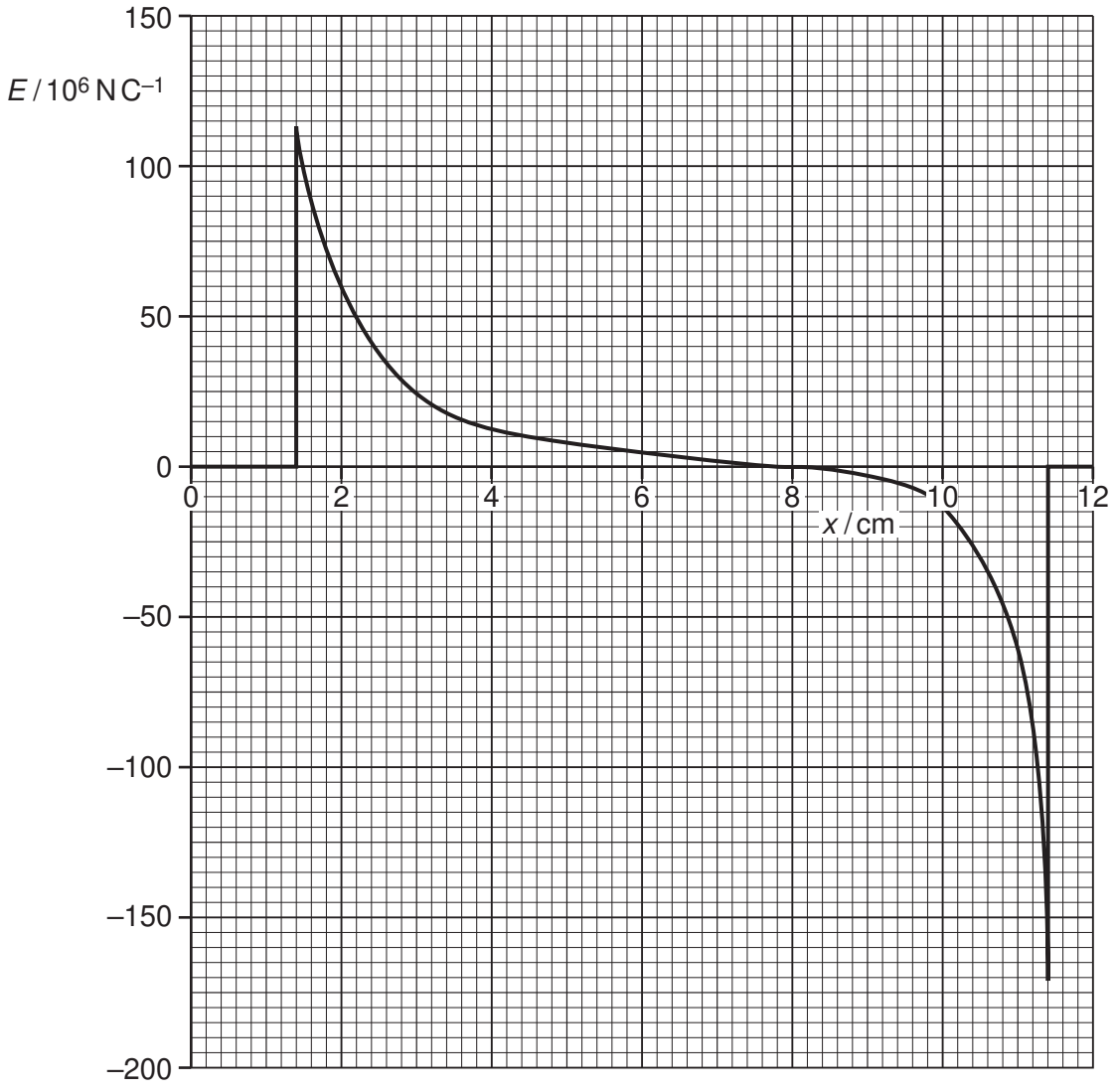

Fig. 4.2

© UCLES 2011

(a) State the evidence provided by Fig. 4.2 for the statements that

(i) the spheres are conductors,

.....

.....[1]

(ii) the charges on the spheres are either both positive or both negative.

.....

.....

.....[2]

(b) **(i)** State the relation between electric field strength E and potential gradient at a point.

.....

.....[1]

(ii) Use Fig. 4.2 to state and explain the distance x at which the rate of change of potential with distance is

1. maximum,

.....

.....

.....[2]

2. minimum.

.....

.....

.....[2]

5 Positively charged particles are travelling in a vacuum through three narrow slits S_1, S_2 and S_3, as shown in Fig. 5.1.

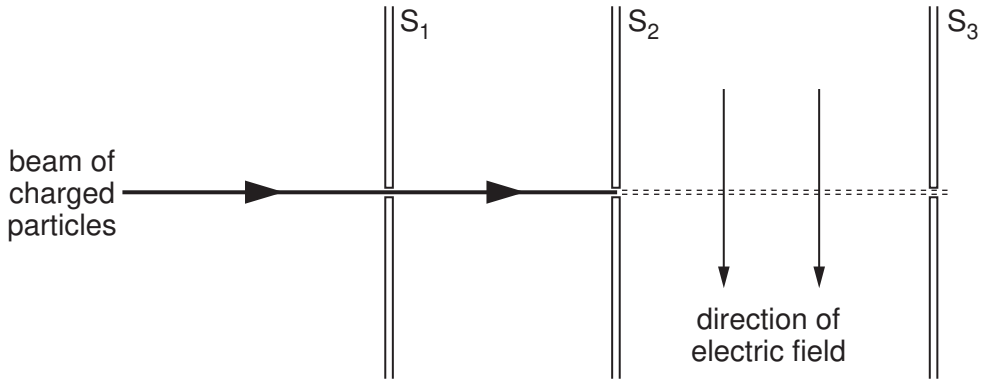

Fig. 5.1

Each particle has speed v and charge q.
There is a uniform magnetic field of flux density B and a uniform electric field of field strength E in the region between the slits S_2 and S_3.

(a) State the expression for the force F acting on a charged particle due to

(i) the magnetic field,

.....[1]

(ii) the electric field.

.....[1]

(b) The electric field acts downwards in the plane of the paper, as shown in Fig. 5.1.
State and explain the direction of the magnetic field so that the positively charged particles may pass undeviated through the region between slits S_2 and S_3.

.....

.....

.....[2]

© UCLES 2011

6 The variation with time t of the output V of an alternating voltage supply of frequency 50 Hz is shown in Fig. 6.1.

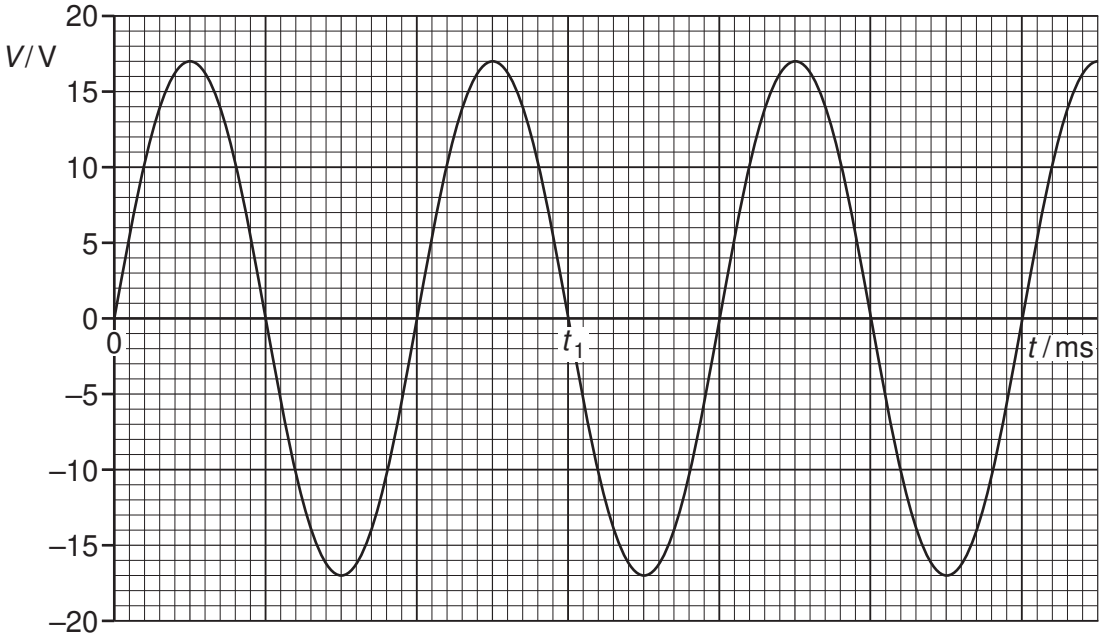

Fig. 6.1

(a) Use Fig. 6.1 to state

(i) the time t_1,

t_1 = ... s [2]

(ii) the peak value V_0 of the voltage,

V_0 = ... V [1]

(iii) the root-mean-square voltage V_{rms},

V_{rms} = ... V [1]

(iv) the mean voltage $<V>$.

$<V>$ = ... V [1]

(b) The alternating supply is connected in series with a resistor of resistance 2.4 Ω.
Calculate the mean power dissipated in the resistor.

power = ... W [2]

7 **(a)** Explain how the line spectrum of hydrogen provides evidence for the existence of discrete electron energy levels in atoms.

.....

.....

.....

.....

.....[3]

(b) Some electron energy levels in atomic hydrogen are illustrated in Fig. 7.1.

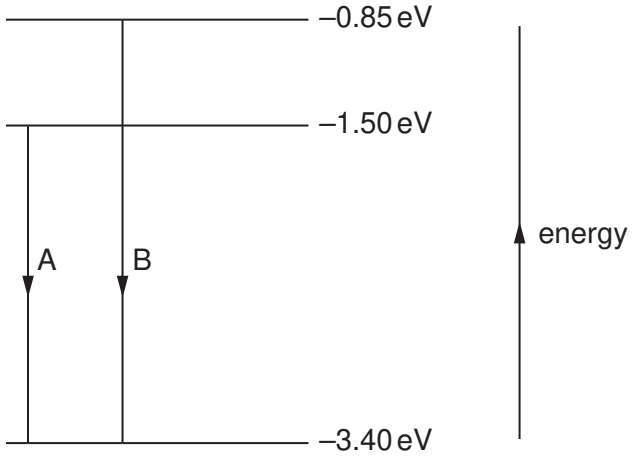

Fig. 7.1

Two possible electron transitions A and B giving rise to an emission spectrum are shown.
These electron transitions cause light of wavelengths 654 nm and 488 nm to be emitted.

(i) On Fig. 7.1, draw an arrow to show a third possible transition. [1]

(ii) Calculate the wavelength of the emitted light for the transition in **(i)**.

wavelength = ... m [3]

(c) The light in a beam has a continuous spectrum of wavelengths from 400 nm to 700 nm. The light is incident on some cool hydrogen gas, as illustrated in Fig. 7.2.

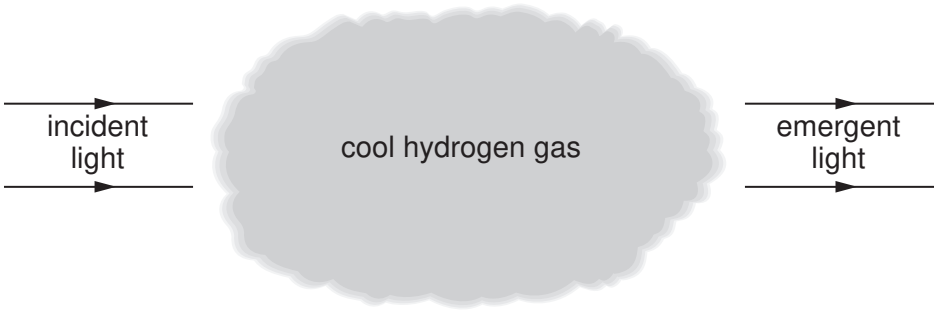

Fig. 7.2

Using the values of wavelength in **(b)**, state and explain the appearance of the spectrum of the emergent light.

.....

.....

.....

.....

.....

.....[4]

8 The isotope phosphorus-33 ($^{33}_{15}P$) undergoes β-decay to form sulfur-33 ($^{33}_{16}S$), which is stable.
The half-life of phosphorus-33 is 24.8 days.

(a) (i) Define radioactive *half-life*.

.....

.....

.....[2]

(ii) Show that the decay constant of phosphorus-33 is $3.23 \times 10^{-7}\,s^{-1}$.

[1]

(b) A pure sample of phosphorus-33 has an initial activity of 3.7×10^{6} Bq.

Calculate

(i) the initial number of phosphorus-33 nuclei in the sample,

number = ...[2]

(ii) the number of phosphorus-33 nuclei remaining in the sample after 30 days.

number = ...[2]

© UCLES 2011

[Turn over

(c) After 30 days, the sample in **(b)** will contain phosphorus-33 and sulfur-33 nuclei. Use your answers in **(b)** to calculate the ratio

$$\frac{\text{number of phosphorus-33 nuclei after 30 days}}{\text{number of sulfur-33 nuclei after 30 days}}.$$

ratio = ...[2]

Section B

Answer **all** the questions in the spaces provided.

9 **(a)** State two effects of negative feedback on the gain of an amplifier incorporating an operational amplifier (op-amp).

1. .....

.....

2. .....

.....

[2]

(b) An incomplete circuit diagram of a non-inverting amplifier using an ideal op-amp is shown in Fig. 9.1.

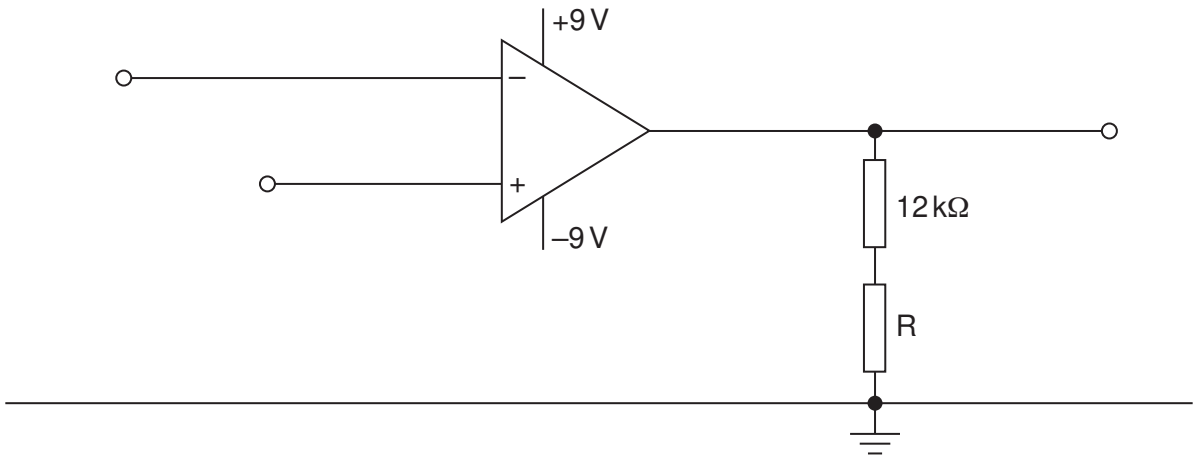

Fig. 9.1

(i) Complete the circuit diagram of Fig. 9.1. Label the input and the output. [2]

(ii) Calculate the resistance of resistor R so that the non-inverting amplifier has a voltage gain of 15.

resistance = ... Ω [2]

(c) On Fig. 9.2, draw a graph to show the variation with input potential V_{IN} of the output potential V_{OUT}.
You should consider input potentials in the range 0 to +1.0V.

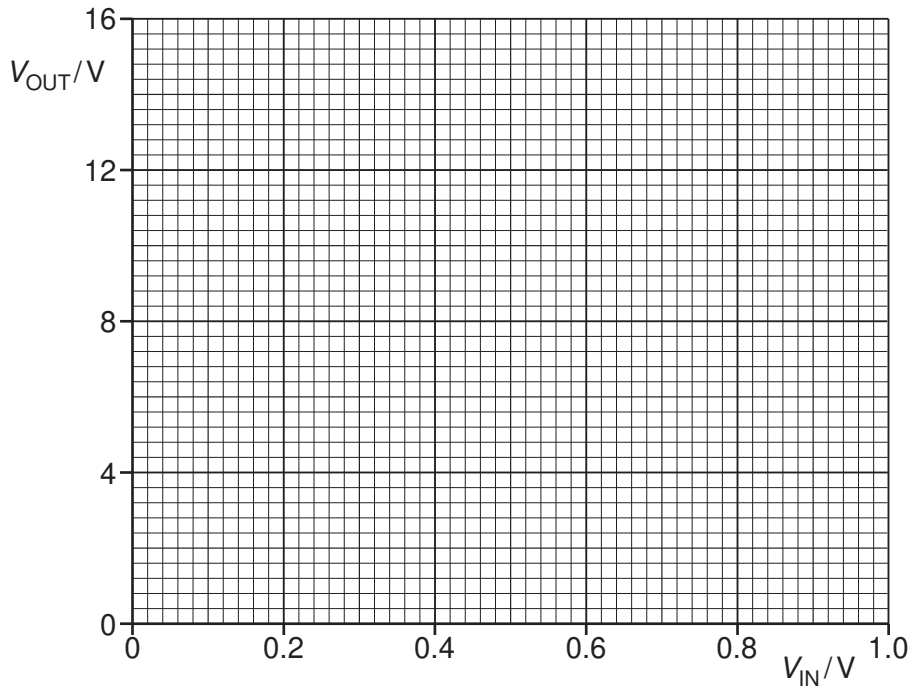

Fig. 9.2

[2]

(d) The output of the amplifier circuit of Fig. 9.1 may be connected to a relay.
State and explain one purpose of a relay.

.....

.....

.....[2]

10 (a) Cable television uses optic fibres for the transmission of signals.
Suggest four advantages of optic fibres over coaxial cables for the transmission of data.

1. .....

.....

2. .....

.....

3. .....

.....

4. .....

.....
[4]

(b) Electromagnetic radiation of wavelength 1310 nm is frequently used for optic fibre communication, rather than visible light.

(i) State the region of the electromagnetic spectrum in which radiation of wavelength 1310 nm is found.

.....[1]

(ii) Suggest why this radiation is used, rather than visible light.

.....

.....[1]

(c) An optic fibre has an attenuation per unit length of $0.2\,\text{dB}\,\text{km}^{-1}$.
A signal is transmitted along the optic fibre of length 30 km to a receiver. The noise power at the receiver is $9.3\,\mu\text{W}$.
The minimum acceptable signal-to-noise ratio at the receiver is 26 dB.

Calculate

(i) the minimum signal power at the receiver,

power = ... W [2]

(ii) the minimum input signal power to the optic fibre.

power = ...W [2]

11 A simplified block diagram of a mobile phone handset is shown in Fig. 11.1.

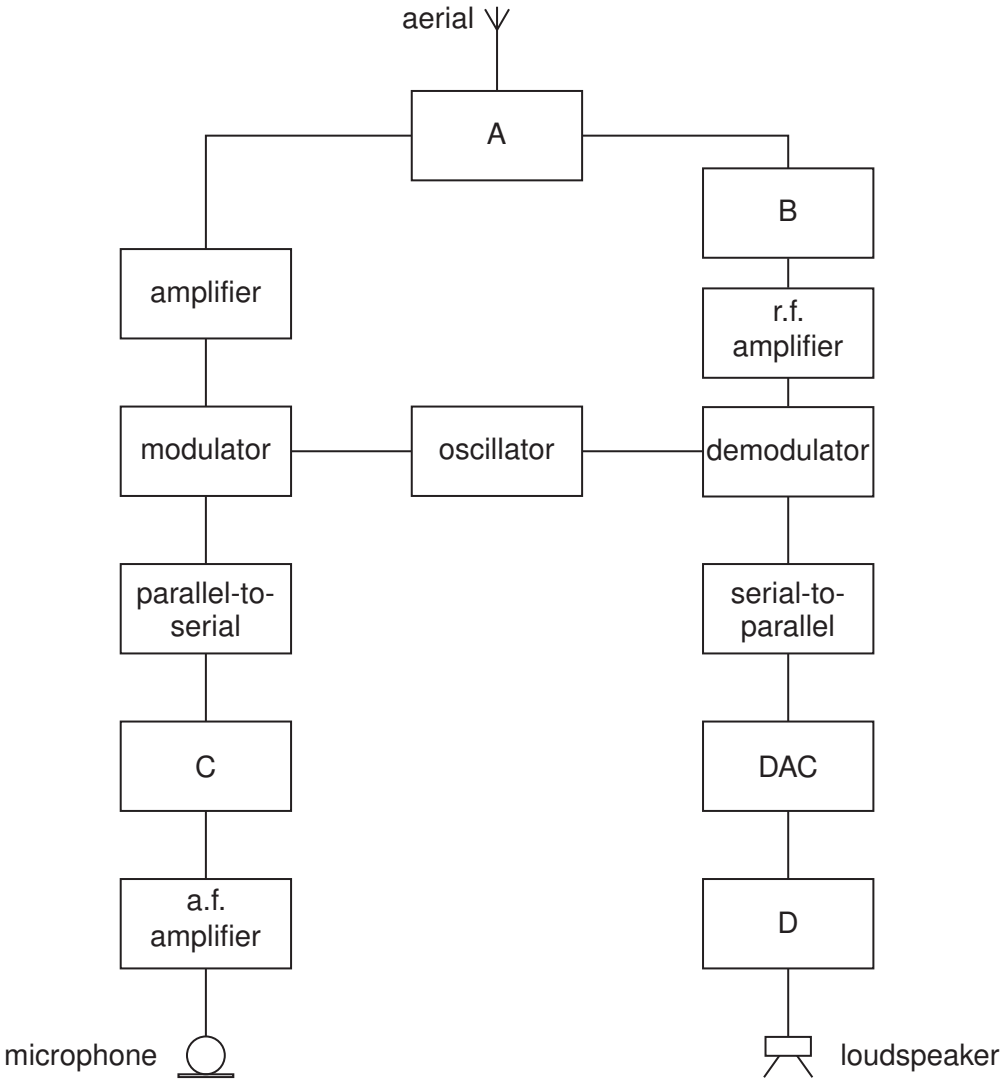

Fig. 11.1

(a) Name and state the function of

(i) block A,

.....

.....

.....[2]

(ii) block B,

.....

.....

.....[2]

(iii) block C,

.....

.....

.....[2]

(iv) block D.

.....

.....

.....[2]

(b) Give two reasons why communication between a mobile phone handset and the base station is conducted using UHF.

1. .....

.....

2. .....

.....
[2]

Permission to reproduce items where third-party owned material protected by copyright is included has been sought and cleared where possible. Every reasonable effort has been made by the publisher (UCLES) to trace copyright holders, but if any items requiring clearance have unwittingly been included, the publisher will be pleased to make amends at the earliest possible opportunity.

University of Cambridge International Examinations is part of the Cambridge Assessment Group. Cambridge Assessment is the brand name of University of Cambridge Local Examinations Syndicate (UCLES), which is itself a department of the University of Cambridge.